houzeplanco

STRUCTURE DRAWING

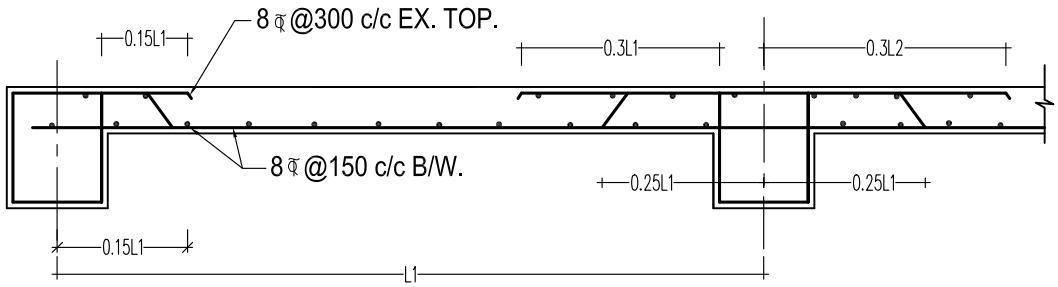

LONG SEC. OF R.C.C. SLAB

SCALE = 1: 25

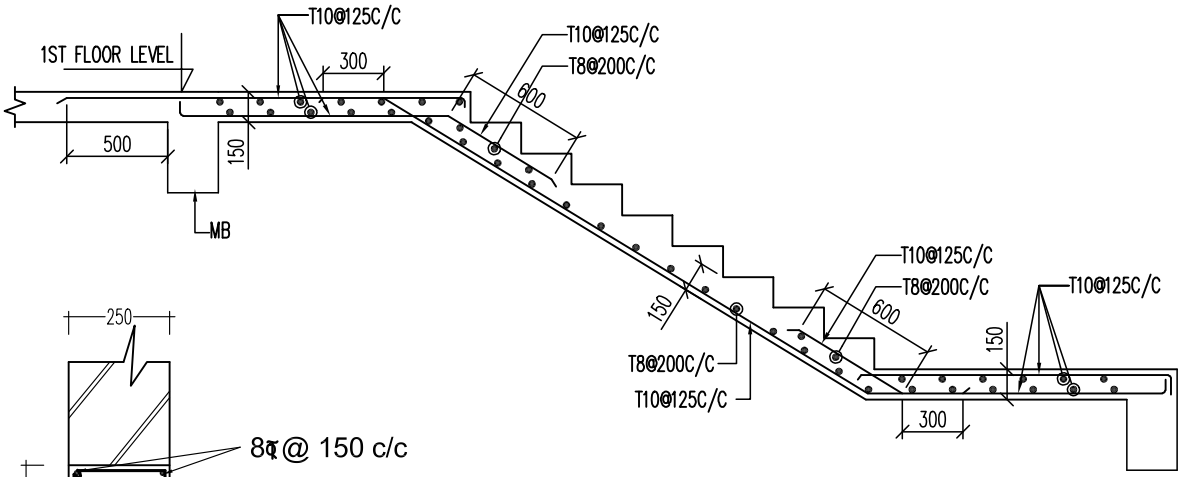

TYP. STAIR SECTION

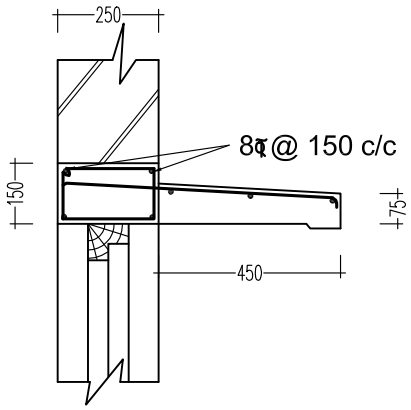

LINTEL WITH CHUJJA

(DETAILS) SCALE = 1: 25

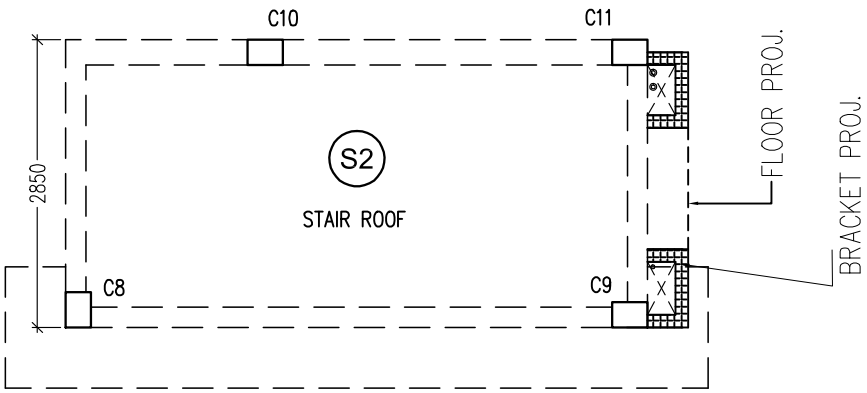

COLUMN, BEAM & SLAB ARRANGEMENT STAIR ROOF

NOTES:-

1. ALL DIMENSIONS ARE IN MM. UNLESS OTHERWISE MENTIONED.
2. ANY AMBIGUITY IN THE DRAWINGS SHOULD BE IMMIDIATELY BROUGHT TO THE NOTICE OF THE CONSULTANT BEFORE COMENCING THE WORK
3. THIS DRAWING IS TO BE READ ALONG WITH ALL RELEVANT ARCHITECTURAL DRAWINGS.
4. ALL GRADE OF CONCRETE M25 .
5. ALL MATERIALS SHALL CONFORM TO RELEVANT I.S CODES.
6. FOR STEEL GRADE Fe 500 AS PER I.S 1786-2008.
7. ALL CHAIRS ARE 10Tor AND TO BE PROVIDED WHEREVER REQUIRED.
8. LAPS, SPLICES & BOND LENGTH SHOULD BE 50 D WHERE 'D' IS THE SMALLEST BAR DIA.
9. MINIMUM CLEAR COVER TO MAIN REINFORCEMENT IS AS FOLLOWS:

MEMBER	TOP	BOTTOM	SIDE
b. COLUMN	-	-	40
c. FLOOR BEAM.	30	30	30
e. FLOOR SLAB.	20	20	20